DRAWING 1A

MODEL#	
PROJECT:	
NOTES:	
DATE:	
APPROVED BY:	
WEIGHT	
Pole:45 LBS/PC	Anchor Bolt:10.5 LBS/SET
Install Base Shield:5.06LBS/PC	Positioning Plate:0.5 LBS/PC

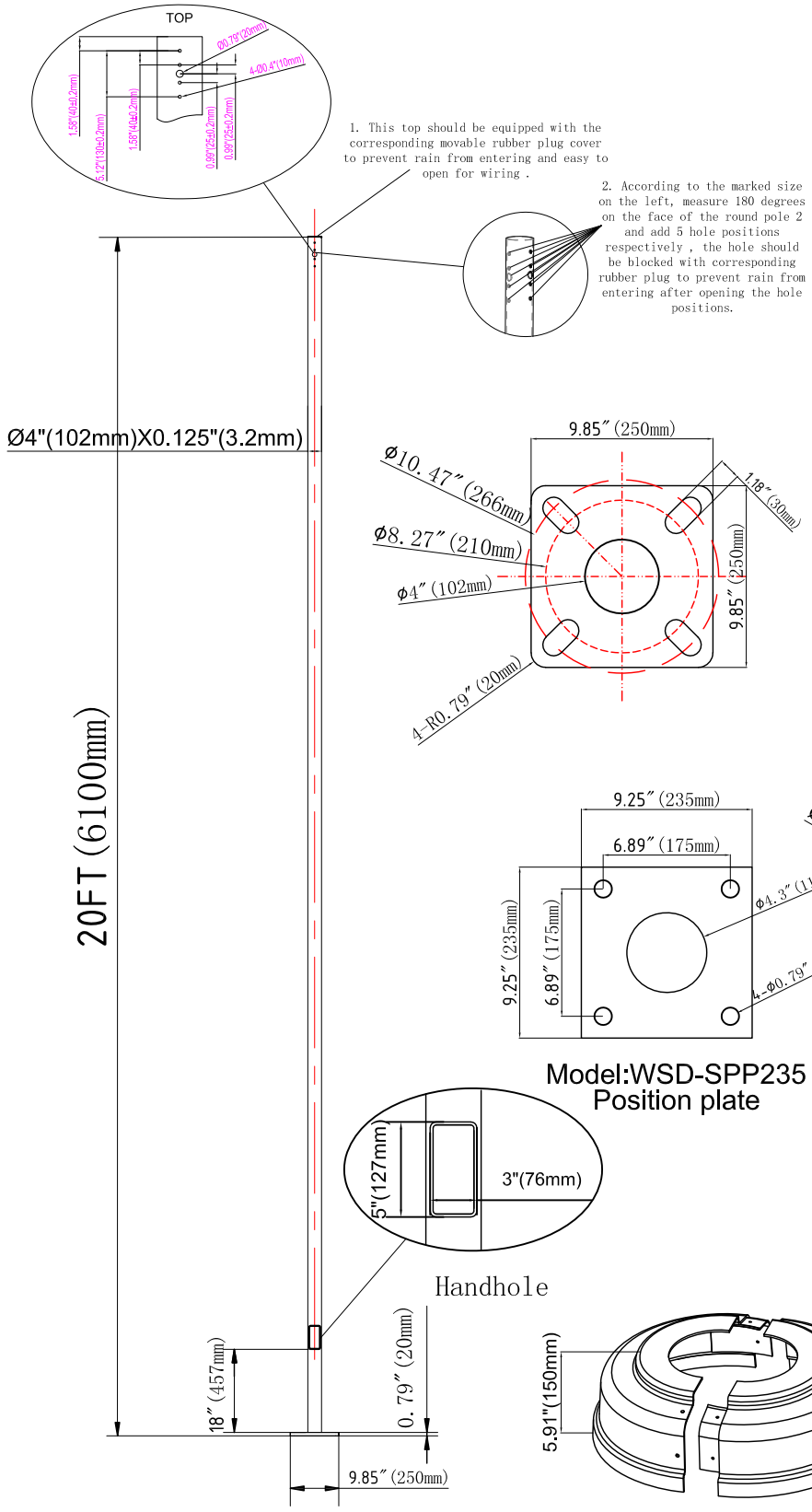

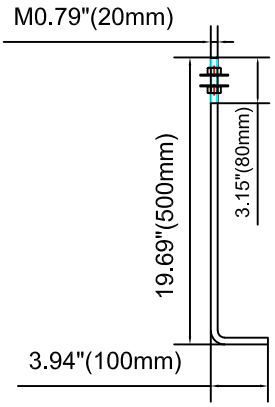

Model:WSD-BMS-S

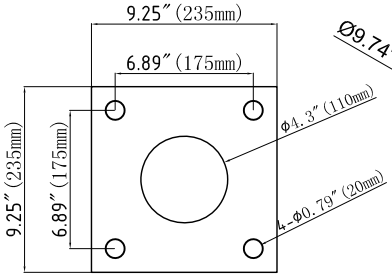

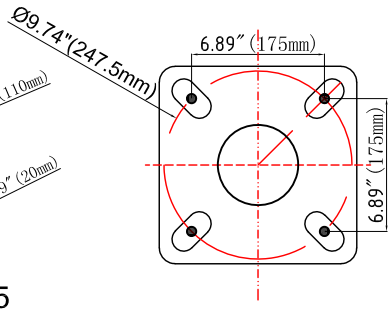

Model:WSD-SPP235
Position plate

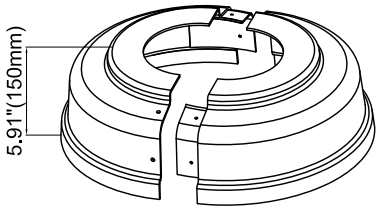

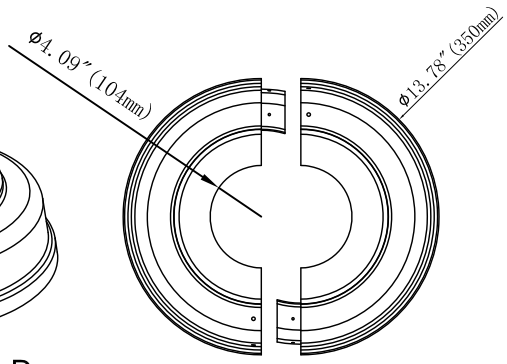

Model:WSD-IBR4-D

Technical requirements
1. The light pole material is aluminum alloy, the light pole surface and inside the aluminum color after oxidation powder treatment shall be subject to the order. No 0.5MM chamfer.
2. All welding (electrode) shall be full, and there shall be no false welding, burr or other defects.
3. The unmarked tolerance shall be executed according to the common tolerance table.
4. Meet RoHS standards.

WSD LED INC
Green Lighting Resources

			edition	Modifier	Time of modification	Repair the interior	
Material No.	312.0422	Edition	A/1	Page 1/1	Tolerance requirements:(tolerance without special requirements)		Date
Material Name	WSD-RAL20FT4-125-D	proportion	1:1	Angle	NO ±0.2	mapping	
Specification Description		unit	mm		.x ±0.1	check	
Drawing Number		material quality			.xx ±0.05		
					.xxx±0.015	examine and verify	